Simplification of Boolean Functions Using Karnaugh Map

Submitted by:

Name	ID
Nawaf Alabdi	B00093759
Ali Abdelatief	B00099836

Submitted to:

Ms. Salsabeel Shapsough

Lab Instructor

American University of Sharjah

College of Engineering

Submitted on:

6/10/2024

Abstract

In this lab we will be finding functions that suit a given sum of minterms or a given Karnaugh map , then use the rules of Boolean algebra to convert such function into a product of sums and derive the function's simplest form which would be used to construct an efficient circuit.

Introduction

In this lab, we will practice extracting Product of Maxterms (POS) expressions from truth tables and simplifying them using Boolean Algebra theorems. Then we will simulate the simplified expression in a simulating software (LogiSim), and we will implement the circuit on a breadboard. Afterwards, we will utilize K-maps to extract the Sum of Minterms (SOM) expressions of different Boolean expressions from their truth tables, simulate and implement them as well.

Theoretical Background

In any given Boolean function, the minterms represent all the combination of inputs that yield a final value of 1. We can then use a given list of minterms to extract a truth table and vice versa. Finally, we convert each minterm into its algebraic form by converting this number into binary and writing the corresponding sequence of inputs (ordering of the variables matches the list of parameters, which is usually alphabetically, the first one being the most significant bit). By summing up all these minterms we get an algebraic expression which defines the function described by the list of minterms or truth table, called the sum of products (SOP).

For example, given a function described by the sum of minterms F(A,B) = sum(1,3) .

We convert the list into binary (01, 11) and replace each string of binary with the parameter list, adding the complement sign whenever we see a zero. Hence, F(A,B) = sum(1,3) = sum (01, 11) = A'B + AB

With this, we can provide an algebraic expression that corresponds to any given truth table.

Karnaugh maps are tables that are used to represent the output of functions, like truth tables, but are special in that they easily allow us to group the 1s and 0s together such that we obtain a much simpler expression than the standard (SOP) obtained from a truth table. To draw a Karnaugh map, we start by drawing a table with the given dimensions:

- 2x2 for 2 variables
- 2x4 for 3 variables
- 4x4 for 4 variables

We then label the left and the top of the table with the list of parameters and the possible binary combinations as seen below :

	C'D' 00	C'D 01	CD 11	CD' 10
A'B' 00				
A'B 01				
AB 11				
AB' 10				

	B'C' 00	B'C 01	BC 11	BC' 10
A' 0				
A 1				

	B' 0	B 1
A' 0		
A 1		

Finally, we complete the table, filling the cells with 1s and 0s that correspond to the combination of inputs that yield that result. Then by grouping together 1s in rectangles of size (2^n, n ϵ ℕ), we get the terms needed to form our final expression. This time, we only combine variables that are common between all cells of the group in each term, making sure to add the complement sign whenever the common variable is a zero. Note that we are allowed wrap around the table to land to the opposite side to make a group.

For example, in the figure below, we see that the 2x2 rectangle in the middle has common variables B and D, so the term that represents this grouping is BD.

Blue rectangle has B' (note the zero, so add a complement sign) and D' in common, so this corresponds to B'D'. Finally. The green group has only A and B in common so this corresponds to the term AB. The final expression will come out to be F = BD + B'D' + AB.

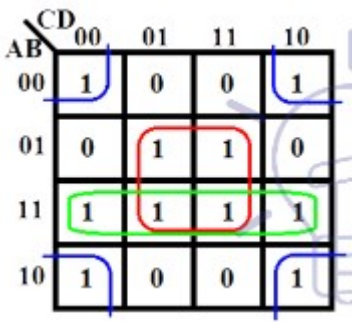

Experimental work, Results and Discussion

Lab Assignment

Question 1:

Given the following Boolean function where:

$$F(A, B, C) = \sum_m (0, 1, 2, 4, 6)$$

a. Build the Truth Table.

A	B	C	F(A,B,C)
0	0	0	1
0	0	1	1
0	1	0	1
0	1	1	0
1	0	0	1
1	0	1	0
1	1	0	1
1	1	1	0

b. Extract the Sum of Maxterms (POS) form.

$$F(A, B, C) = \pi_M (3,5,7)$$

$$= (A+\bar{B}+\bar{C}) \,.\, (\bar{A}+B+\bar{C}) \,.\, (\bar{A}+\bar{B}+\bar{C}$$

c. Simplify the expression in part (b), show your work.

$$(A+\bar{B}+\bar{C})(\bar{A}+B+\bar{C})(\bar{A}+\bar{B}+\bar{C})$$

$$= \overline{\overline{(A+\bar{B}+\bar{C})(\bar{A}+B+\bar{C})(\bar{A}+\bar{B}+\bar{C})}}$$

$$= \overline{\overline{(A+\bar{B}+\bar{C})} + \overline{(\bar{A}+B+\bar{C})} + \overline{(\bar{A}+\bar{B}+\bar{C})}}$$

$$= \overline{\bar{A}BC + A\bar{B}C + ABC}$$

$$= \overline{(\bar{A}BC + ABC) + (A\bar{B}C + ABC)}$$

$$= \overline{BC(\bar{A}+A) + AC(\bar{B}+B)}$$

$$= \overline{BC + AC}$$

$$= \overline{BC} \cdot \overline{AC}$$

$$= (\bar{B}+\bar{C})(\bar{A}+\bar{C})$$

$$= \bar{B}\bar{A} + \bar{B}\bar{C} + \bar{C}\bar{A} + \bar{C}\bar{C}$$

$$= \bar{B}\bar{A} + \bar{B}\bar{C} + \bar{C}\bar{A} + \bar{C}$$

$$= \bar{B}\bar{A} + \bar{B}\bar{C} + \bar{C}$$

$$= \bar{B}\bar{A} + \bar{C}$$

d. Simulate the simplified circuit using Logisim.

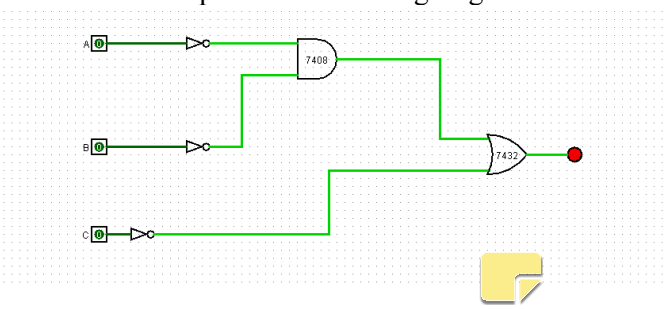

e. Implement the simplified circuit on the breadboard.

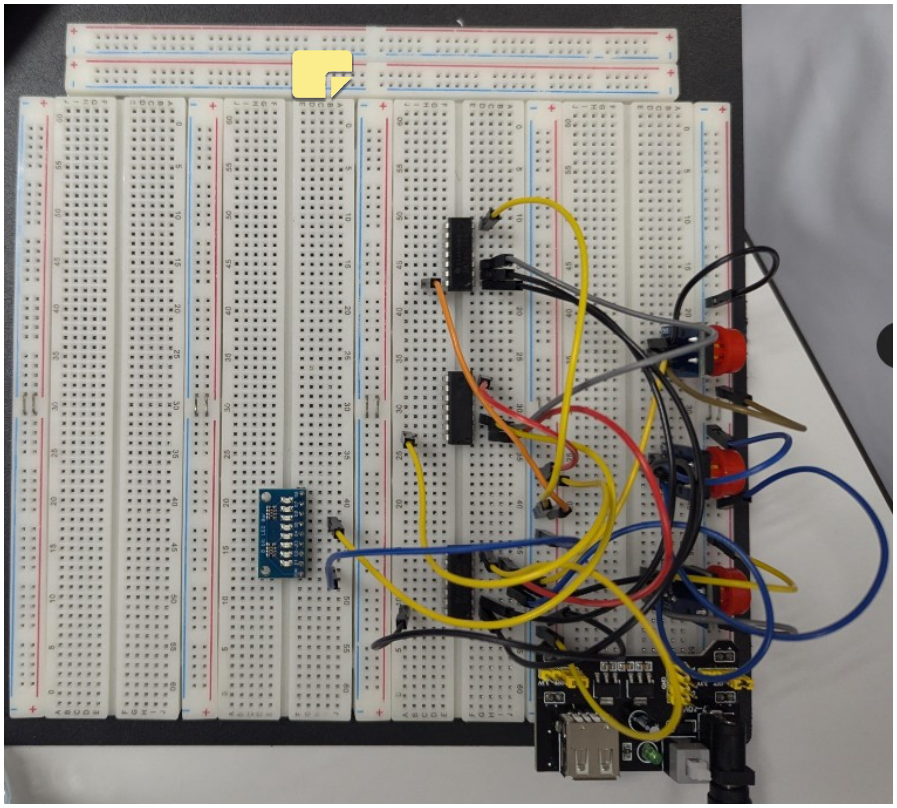

Question 2:

Given the following kmaps

	B’ 0	B 1
A’ 0	1	0
A 1	1	0

F(A,B)

	B’ 0	B 1
A’ 0	1	0
A 1	0	1

G(A,B)

	B’ 0	B 1
A’ 0	0	1
A 1	1	0

H(A,B)

a. Extract the expression for each of F, G, and H.

$F = \overline{B}$

$G = \overline{A}\overline{B} + AB = \text{XNOR}(A,B)$

$H = \overline{A}B + A\overline{B} = \text{XOR}(A,B)$

b. Simulate all three functions in Logisim.

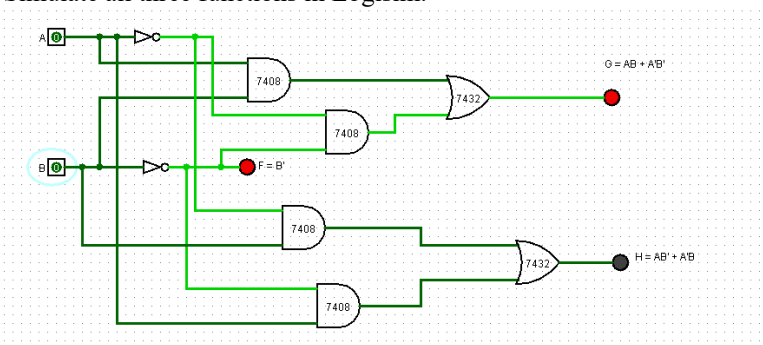

Simplified circuit :

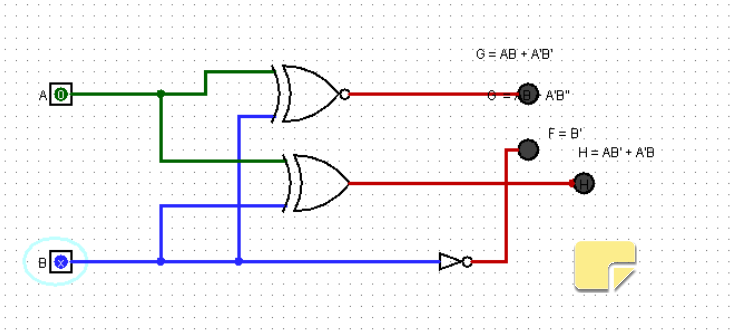

c. Implement all three circuits on the breadboard.

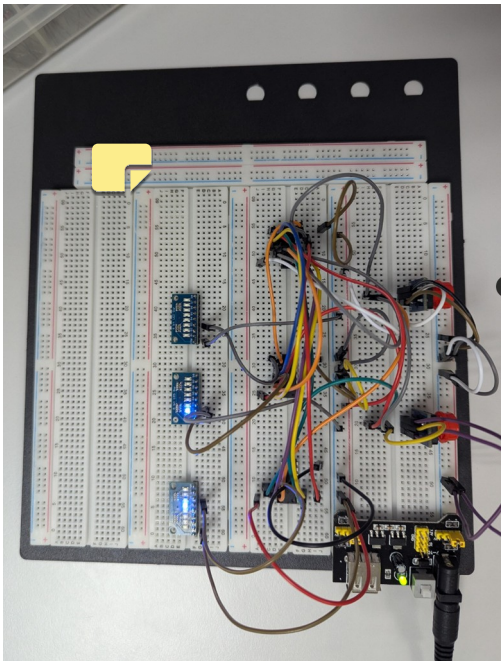

Conclusion

In this lab, we went over extraction of POS expressions from truth tables and simplifying them, as well as using K-maps to immediately obtain the SOM expressions of any Boolean expression. We then simplified the expressions whenever possible, and implemented them on a breadboard.